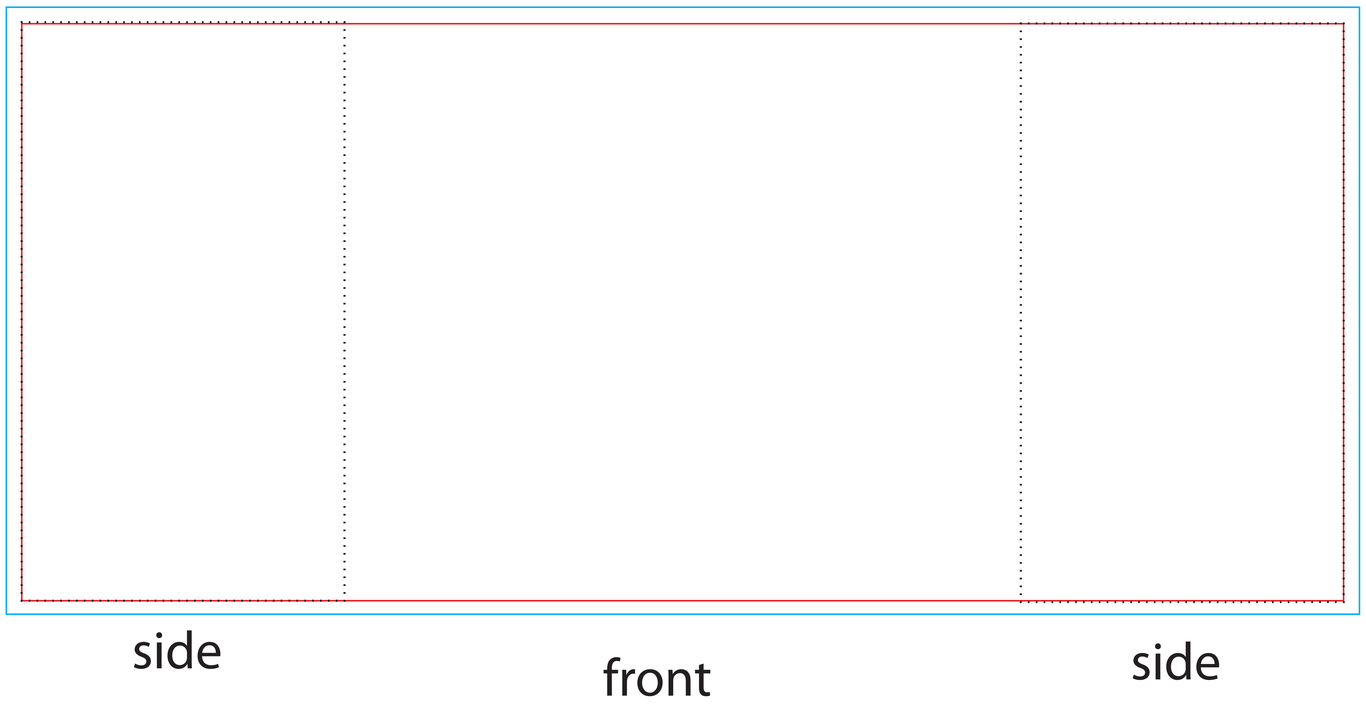

Counter panels (x3 panel total)
Single sided fabric
Visual area= 86.125”w x 37.625“h
With 2” bleed= 88.125”w x 39.625”h
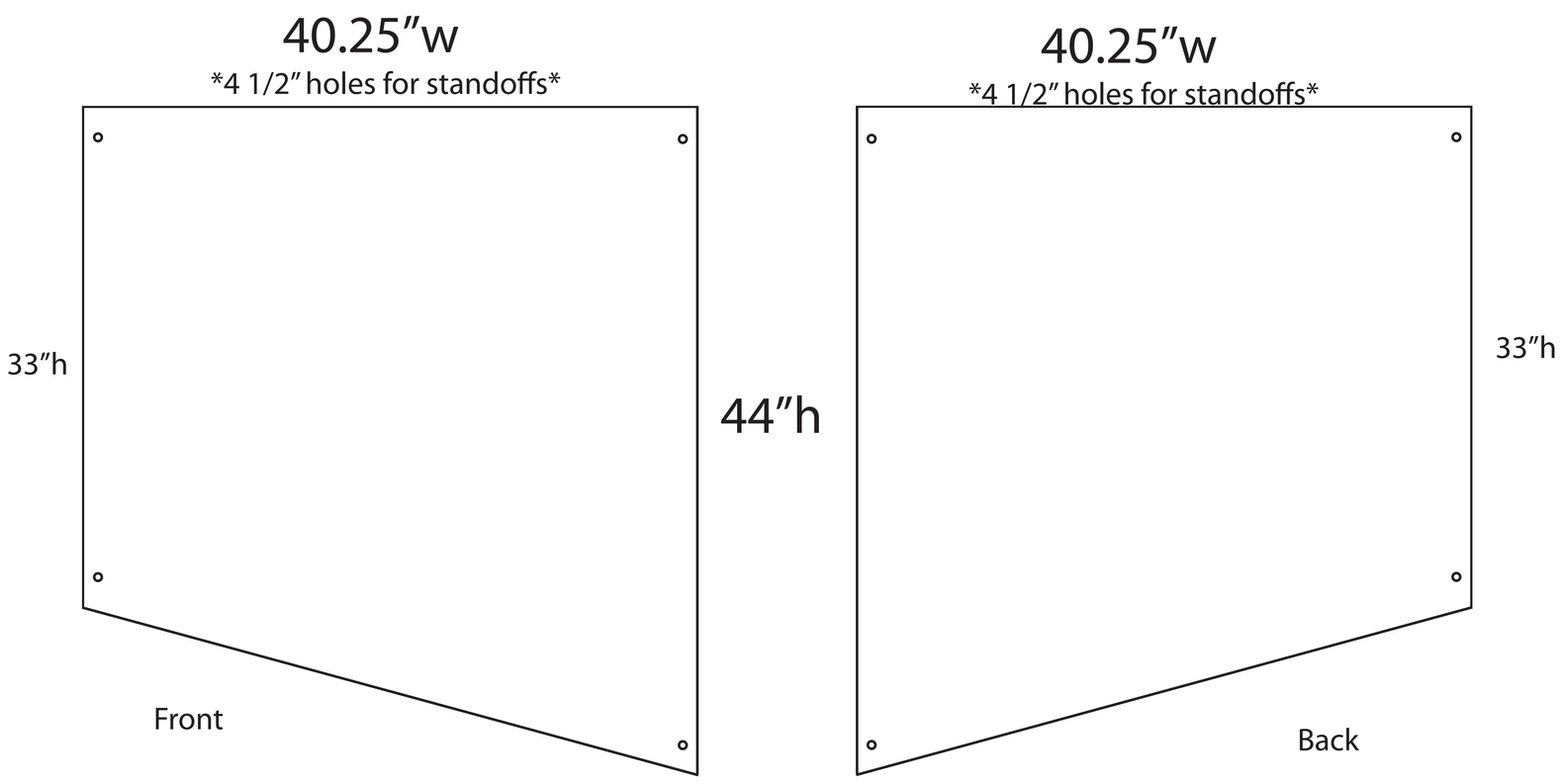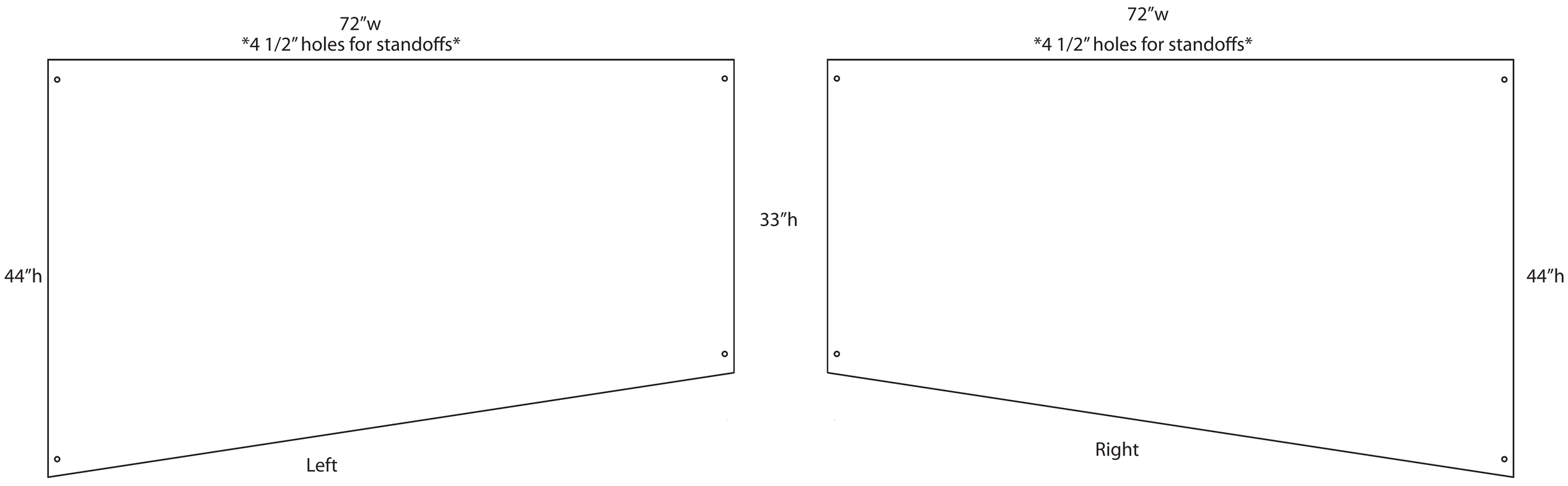
XR.2020.06 design specs